CORRESPONDENCE

Anesthesiology
72:576, 1990

A New Double-Angle Blade for Direct Laryngoscopy

To the Editor:—A new Double-Angle blade (Prototype made by Anesthesia Medical Specialties, Cerritos, California 90701, U. S. Patent Pending) incorporating two incremental curvatures, no flange, and a wide, flat blade shaft has been designed and tested. It provides excellent visualization of the glottis, good control of the tongue and epiglottis, a minimal risk of damaging the teeth, and simplicity.

The new laryngoscope blade is designed to combine the advantageous features of the Miller[1] and Macintosh[2] blades and to eliminate their disadvantageous features. The flange, a vertical component, is totally eliminated to decrease the potential for damage to the teeth and to allow more room for intubation (fig. 1).

The spatula consists of two incremental curvatures, 20° and 30°, to improve lifting of the epiglottis and reduce the need of the laryngoscope to tilt posteriorly in the patient with an anterior larynx (fig. 2). In addition, the spatula and its tip have a wide and flat surface to permit easy manipulation of a big tongue and/or a "floppy" epiglottis. The blade is 14.5 cm long, 2.5 cm (block-end) and 2 cm (base of the tip) wide, and 3 mm thick. It is made with hook-on or screw-on fittings. The bulb (2.5 V, 0.28 A) is located on the left edge of the blade between the two curvatures to provide a wide visual field. The light is focused directly on the glottis. The bulb is exposed for easy access to cleaning the blade. Excellent visualization of the glottis is achieved by either lifting the epiglottis as is done with straight blades or by the indirect approach as with the Macintosh blade.

Successful tracheal intubation with direct laryngoscopy depends on: 1) adequate visualization with a straight line of vision; 2) adequate space for passing an endotracheal tube along with proper position of the tongue and ample opening of the mouth; and 3) no damage to the teeth or other soft tissue injury. The line of vision is limited by the upper incisors, the high point of the arc of the blade, and the location of the glottis. The high point of the arc of the blade is eliminated with the Double-Angle blade. In the patient with an anterior-situated larynx and protruding teeth, it may be extremely difficult to displace the epiglottis enough to visualize any part of the glottis. The incremental angles on the Double-Angle blade fit the anatomy of the pharynx, thus lifting the hyoid and the epiglottis effectively, greatly improving visualization with minimal effort.

A better exposure of the glottis is sometimes obtained with the straight blade. However, because of the convexity of the narrow shaft and the position of the light bulb unit of the Miller blade on the right side it is occasionally difficult to pass a tube despite adequate exposure. A large floppy epiglottis is occasionally difficult to lift with the Miller blade. With the wide, angled tip of the Double-Angle blade, it is extremely easy to handle the epiglottis and/or the tongue for optimal exposure of the glottis.

The most common cause of the tooth damage is that the upper incisors are used as a fulcrum. Elimination of the vertical flange greatly decreases the risk of damaging the teeth. In addition, the potential benefit of displacing the tongue with the flange is retained. The wide, flat shaft of the Double-Angle blade pushes the tongue and the other soft tissue structures downward. The additional advantage includes the simplicity of the blade (not requiring any attachments, mirror or prism) allowing easy handling and cleaning of the laryngoscope.

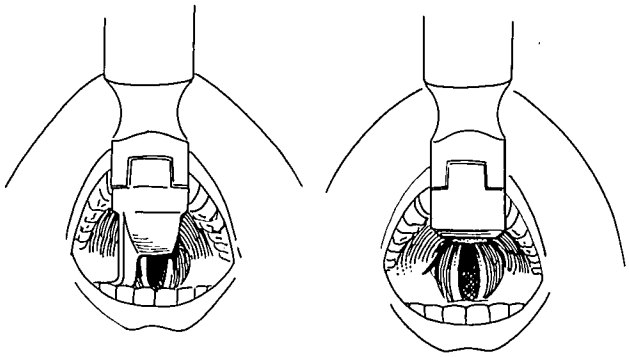

FIG. 1. The effect of the flange in the Macintosh (*left*) and Double-Angle (*right*) blade. Notice the area of improved vision and more room with the nonflanged Double-Angle blade. This should also reduce the risk of damaging teeth.

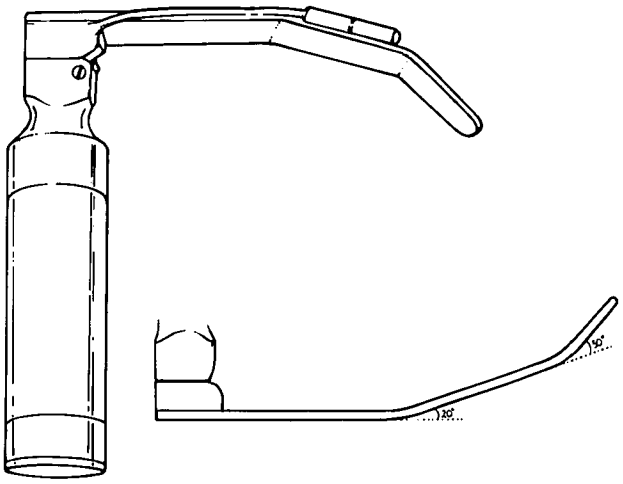

FIG. 2. The Double-Angle blade: Notice the incremental curvatures (20° and 30°).

JAY JONG-IL CHOI, M.D.*
Associate Professor of Clinical Anesthesiology
Department of Anesthesiology
University of Medicine and Dentistry
New Jersey Medical School
185 South Orange Avenue
Newark, New Jersey 07103

* Dr. Choi is the inventor of the double-angle blade.

REFERENCES

1. Miller RA: A new laryngoscope. ANESTHESIOLOGY 2:317–320, 1941
2. Macintosh RR: A new laryngoscope. Lancet 1:205, 1943

(Accepted for publication December 5, 1989.)

Downloaded from http://asa2.silverchair.com/anesthesiology/article-pdf/72/3/576/636154/0000542-199003000-00033.pdf by guest on 19 April 2024