Aortic Biomechanics and Clinical Applications

Alexander J. Gregory, M.D., F.R.C.P.C., Elena Stefania Di Martino, Ph.D., Paul W. M. Fedak, M.D., Ph.D., Gary M. Dobson, M.D.C.M., M.Sc., F.R.C.P.C.

Knowledge of cardiovascular anatomy and physiology is foundational to providing optimal perioperative patient care. Historically, attention has generally focused on cardiac function, arterial pressure, organ perfusion, and oxygen delivery. The physiologic role of the aorta has garnered less attention. Refinement of arterial system models, increased awareness of ventricular–aortic–arterial interactions, and improvements in less invasive measures of cardiovascular physiology have led to growth in the field of aortic biomechanics—the application of mechanical laws to biologic structures. Although the clinical importance has yet to be fully explored, there is a growing body of published medical research integrating the principles of biomechanics with the bedside practice. In this article, we review the foundations of aortic biomechanics, including material properties of the aortic wall tissue, how they contribute to mechanical behavior, and modeling that helps describe the physiologic role of the aorta. Furthermore, we summarize current methods for quantifying aortic biomechanics and introduce early clinical applications from this emerging area of interest.

Physiology of the Aorta

Aortic Wall Microstructure and Material Properties

The aorta is composed of three layers: the intima, media, and adventitia. Each layer has distinct cellular and noncellular constituents forming the microstructure that determines material properties of the tissue, including the response to mechanical forces exerted on it during pulsatile blood flow. Extracellular matrix proteins predominantly define the biomechanical properties along the aorta (*i.e.*, from aortic root to iliac bifurcation), in contrast with branch arteries and peripheral arteries/arterioles where cellular components, such as smooth muscle cells, play a comparatively larger role.[1–3] The extracellular matrix principal proteins are elastin, fibrillin, collagen, and proteoglycans. Elastin and fibrillin interact to form three-dimensional coils, or lamellae, which can be reversibly stretched and are elastic in nature at low levels of stretch (*i.e.*, lower wall stress, lower pressure).[4,5] Collagen fibers are thicker and stiffer. In normal aortic tissue, elastin fibers within the lamellae are active at low deformation, and collagen remains crimped. As the heart ejects blood, the pressure wave results in aortic wall stress, which leads to increased tissue stretching. As it stretches, collagen begins to straighten and gradually becomes the primary load bearer (*i.e.*, higher wall stress, higher pressure), with a resulting change in the mechanical behavior (fig. 1A). Proteoglycans are mucopolysaccharides that assist the function of the lamellae by providing structural support and contributing to homeostatic regulation.[1,2]

Our knowledge regarding the dynamic roles of cellular components, and an increased appreciation for their biomechanical importance, have grown over the past decade. Smooth muscle cells maintain vascular tone and resistance through contractile function, while also secreting elastin, collagen, extracellular matrix enzymes, and cytokines.[2,3] Fibroblasts are key contributors to the extracellular matrix through collagen secretion and have a vital role in the repair of damaged wall tissue.[7] Interactions between cellular and extracellular components, genetics and epigenetics, pathway activation secondary to mechanical forces (called mechano-transduction), and a variety of other interrelated pathways (metabolic, inflammatory, and immune) have all been identified as participants in a complex aortic tissue ecosystem.[8–10]

Stress, Strain, and Shear

Blood ejected during the cardiac cycle results in transmission of a pulse wave to the peripheral vessels. The arterial pulse waveform, its components, methods of measurement, changes with pulse wave reflection, and alterations in disease states have been previously reviewed.[11–14] The rise in intra-aortic pressure during pulse wave transmission contributes to aortic wall stress. Laplace's law [$\sigma = PR/2t$] mathematically describes this wall stress (σ) as it relates to radius (R), pressure (P), and thickness (t). The effect of wall stress on

This article is featured in "This Month in Anesthesiology," page A1.

Submitted for publication December 6, 2021. Accepted for publication June 20, 2022. Published online first on July 29, 2022.

Alexander J. Gregory, M.D., F.R.C.P.C.: Department of Anesthesiology, Perioperative and Pain Medicine and Libin Cardiovascular Institute, Cumming School of Medicine, University of Calgary, Calgary, Canada.

Elena Stefania Di Martino, Ph.D.: Department of Biomedical Engineering, University of Calgary, Calgary, Canada.

Paul W. M. Fedak, M.D., Ph.D.: Department of Cardiac Sciences and Libin Cardiovascular Institute, Cumming School of Medicine, University of Calgary, Calgary, Canada.

Gary M. Dobson, M.D.C.M., M.Sc., F.R.C.P.C.: Department of Anesthesiology, Perioperative and Pain Medicine, Cumming School of Medicine, University of Calgary, Calgary, Canada.

Copyright © 2022, the American Society of Anesthesiologists. All Rights Reserved. Anesthesiology 2022; 137:351–63. DOI: 10.1097/ALN.0000000000004313

Copyright © 2022, the American Society of Anesthesiologists. All Rights Reserved. Unauthorized reproduction of this article is prohibited.

Downloaded from http://asa2.silverchair.com/anesthesiology/article-pdf/137/3/351/674460/20220900.0-00019.pdf by guest on 20 April 2024

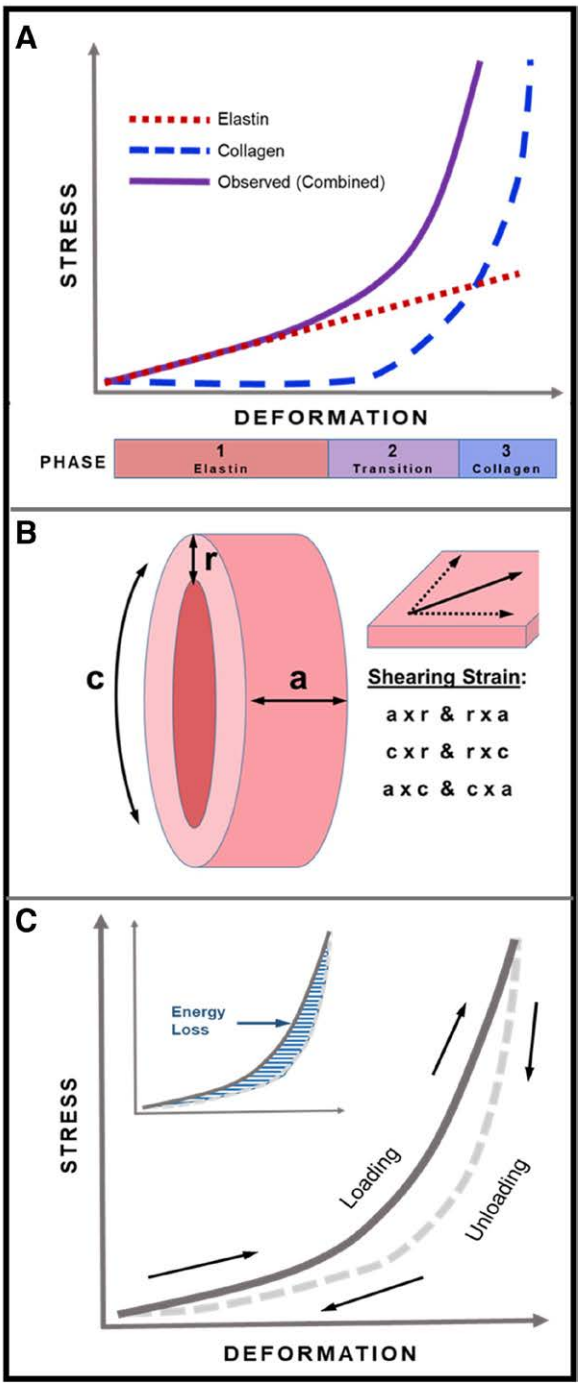

Fig. 1. (*A*) The distinct mechanical properties of elastin and collagen in isolation, and the resultant mechanical behavior of both in combination result in a nonlinear stress–strain response curve. Elastin is the principal active material during periods of low stress or low strain (phase 1), while collagen is most important in high stress/high strain (phase 3). There is a transition zone where the activities of both overlap (phase 2).[1,2,4] (*B*) A segment of the aorta is shown with three one-dimensional strains that occur when the tissue is loaded as blood is ejected into the aorta: radial (r), axial (a), and circumferential (c). In addition, the deformation of aortic tissue, referred to as strain, can be described using a linear elastic, or Hookean, model [$\sigma = E\,\epsilon$]. Strain (ϵ) and stress (σ) are related through a constant known as the Young's (or elastic) modulus (E), sometimes referred to as elastance. The value of this constant, the *modulus of elasticity*, will vary depending on the properties of the tissue itself, with stiffer tissues having larger constants and producing a linear stress–strain curve with lower slopes.[1] More sophisticated models, such as finite element analysis, aim to model stress in a more physiologically accurate and clinically meaningful fashion. Complex aortic geometry is subdivided into a finite number of smaller, simpler portions (elements). Local wall stress is calculated for these elements and combined mathematically to derive regional values across the aorta (fig. 2).[15]

Strain is defined as the difference in length between two reference points relative to their original distance when tissue is stretched (positive strain) or relaxed/compressed (negative strain). It is unit-less, often reported as a percentage, and described by motion across nine directions: three one-dimensional strains in the radial, axial (sometimes referred to as longitudinal), and circumferential directions, and six shearing (two-dimensional) strains (fig. 1B).[1,4,15] Measurements of aortic strain will produce both positive and negative values, since the tissue lengthens or shortens depending on which timeframe within the cardiac cycle the motion is measured. Since the aorta is never fully unstressed *in vivo* (*i.e.*, it is never empty), most consider end diastole as the initial length when measuring strain.

As viscous blood flows along the solid boundary of the intimal wall, it exerts a tangential force over the area it traverses.[16] This is called wall shear stress and can stimulate the endothelium to initiate inflammatory and remodeling pathways.[4,17] At the blood–tissue interface of the arterial tree, the endothelium is exposed to mostly laminar and monodirectional flow. This produces a moderate level of wall shear stress, which is beneficial, stimulating pathways that protect endothelial function and maintain homeostasis

Fig. 1. (*Continued*) the *inset* shows a close-up of the aortic wall with six two-dimensional shearing strains, also occurring during the loading phase: axial–radial (a x r), radial–axial (r x a), circumferential–radial (c x r), radial–circumferential (r x c), axial–circumferential (a x c), and circumferential–axial (c x a).[1] During unloading, the return of aortic tissue to its preloaded state would be measured along the same nine directions. (*C*) A hysteresis is produced when aortic tissues are loaded, then unloaded. The area between the two represents energy loss, which reflects the viscoelastic properties of the aorta and can become altered in disease states.[6] Note: Physiologists frequently display biologic hysteresis loops with pressure on the x-axis and volume on the y-axis, which typically results in a loading or distension curve being *below* that for unloading or relaxation. The figure follows the convention used by engineers, with deformation (analogous to volume) on the x-axis and stress (analogous to pressure) on the y-axis. This configuration results in the loading curve being *above* that for unloading.

Downloaded from http://asa2.silverchair.com/anesthesiology/article-pdf/137/3/351/674460/20220900.0-00019.pdf by guest on 20 April 2024

Copyright © 2022, the American Society of Anesthesiologists. All Rights Reserved. Unauthorized reproduction of this article is prohibited.

in the vessel wall. Flow patterns transition toward turbulence at locations where abnormal aortic shape, unusually elevated velocity or misdirected patterns of blood flow, or endothelial dysfunction occur. This results in abnormal wall shear stress, further endothelial damage, and disturbances in the normal composition of aortic wall tissue.[16–18]

Nonlinear Mechanical Behavior of Aortic Tissue

Plotting the stress–strain relationship for a linearly elastic material under an externally applied stress results in a straight line whose slope is determined by the material's stiffness, described in the section Stress, Strain, and Shear as the Young's (or elastic) modulus. Furthermore, when the applied stress is removed, the stress–strain plot will return to baseline along that same line. However, this is not the observed behavior of aortic tissue, where the stress–strain relationship is in fact nonlinear and characterized by a hysteresis.[1,2,6] The previously described aortic tissue microstructure imparts three mechanical properties that produce this nonlinear response to loading/unloading. First, the variable properties and contributions of elastin and collagen result in a triphasic nonlinear curve, reflecting the relative contribution of each at different levels of strain: low stress or low strain with a lower slope (elastin-dominant), and high stress or high strain with a higher slope (collagen-dominant), including a transition zone which is represented by an inflection point between the two (fig. 1A and 1C).[19] The collagen-dominant slope is not typically reached in healthy aortic tissue under physiologic loading conditions.[1,2] Second, aortic tissue does not display the same strain in all directions (called *isotropic*); rather, it is *anisotropic*, and the degree of strain will vary based on the direction being measured (for example, axial *vs.* circumferential).[1,2] Third, the viscoelasticity of the aorta results in energy being absorbed by the tissue during loading. Subsequently, the stress–strain curve will follow a different path as it unloads toward its baseline state, creating a hysteresis loop that is common in viscoelastic biologic tissues, called *energy loss* (fig. 1C).[6] Energy loss varies with alterations in the endothelium or tissue wall composition, including pathologic states; is measurable both *in vivo* and *ex vivo*; and has become an emerging biomechanical parameter of aortic function.[6,20]

The overall clinical implications of nonlinear elastic behavior are dependent on the material properties of the aorta and can be summarized as follows: (1) the effects of pulsatile blood flow on aortic wall stress and shearing forces are not linear, (2) the nonlinearity is based on the microstructural components of the aorta, (3) any disease state or medical intervention that alters aortic microstructure will also change the nonlinear mechanics of the tissue, and (4) these changes may result in greater energy loss or an abnormal stress–strain curve with an earlier inflection point (fig. 3). Such changes in the nonlinear properties of the aorta may allow for detection and quantification using noninvasive techniques described in the section Methods to Measure Aortic Biomechanics, and could have clinical ramifications including increased myocardial work, altered pulse wave transmission to the peripheral arteries, or predisposition to aortic dissection and rupture.

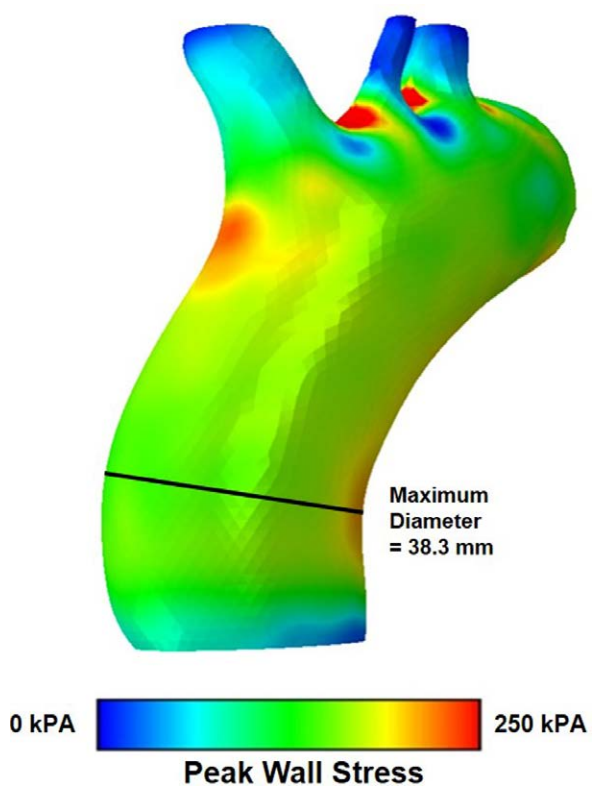

Fig. 2. Example of a finite-element–based stress analysis of the ascending aorta and supra-aortic vessels. The proximal ascending aorta is mildly dilated (maximum diameter of 38 mm). Abaqus (Dassault Systemes, France) was used to simulate the systolic pressure peak in a static nonlinear simulation with material properties obtained from mechanical testing of explanted tissues. The aneurysm causes changes in aortic shape and curvature, which result in areas of elevated stress along the lesser curvature and at the branch vessels (areas of *red coloration*). These areas of abnormally high stress may represent high-risk locations for aortic complications, such as acute dissection. Units of measure for stress = KPa (kilopascal).

Models of Ventriculo-arterial Physiology

There are multiple models of varying complexity that have been developed to describe the behavior of the aorta and the arterial tree, including how they couple with the heart.[21] Three models often used in clinical research include the Windkessel, the distributed model of arterial behavior, and a recently proposed reservoir pressure model that attempts to reconcile the two.[12,21–23]

The Windkessel is a lumped model of the arterial tree, which in its simplest form is resistance (R) and capacitance (C) in parallel. The pressure decay during diastole is considered an exponential characterized by a time constant τ,

Downloaded from http://asa2.silverchair.com/anesthesiology/article-pdf/137/3/351/674460/20220900.0-00019.pdf by guest on 20 April 2024

Copyright © 2022, the American Society of Anesthesiologists. All Rights Reserved. Unauthorized reproduction of this article is prohibited.

the product of R and C (fig. 4A). Measurement of either variable allows for the calculation of the other. To better approximate the reality of pulsatile flow, characteristic impedance (Z_0) is added in series to R and C, calculated in the frequency domain or approximated using aortic pulse wave velocity.[23] The three parameters of the model can be measured clinically with invasive pressure/flow catheters, noninvasively with ultrasound or tonometry, or combinations of both, to examine the effect of interventions on ventricular afterload.

Through characterization of physical properties in short segments of arteries and aorta, and combining them in series and parallel, a distributed arterial model based on transmission line theory has also been described.[22] The characteristics for each segment are length, radius, wall thickness, and modulus of elasticity. With constants of blood density, blood viscosity, wall viscoelasticity, and Poisson ratio, and including a fixed or variable reflection at the end of the series of segments (*i.e.*, at the level of small arteries/arterioles with diameters ranging from 60 to 250 μm), the model produces an impedance spectrum from the ascending aorta to the peripheral vessels (fig. 4B).[22,24] Changes in the properties of individual segments can be used to model the effects of stents, grafts, or vasoactive drugs. The distributed model also led to the development of a transfer function, where a central aortic pressure waveform can be generated from a brachial or radial artery waveform.[25] The transfer function is helpful for clinical research; for example, an existing radial artery catheter placed for monitoring can be used to derive an aortic pressure waveform to assist with intraoperative biomechanical assessments.[26,27] Both the distributed model and the three-element Windkessel can be used to derive forward and reflected waves or couple the aorta with cardiac time-varying elastance models to explore the effect of changing any of the models' parameters on ventricular afterload and work.[28,29]

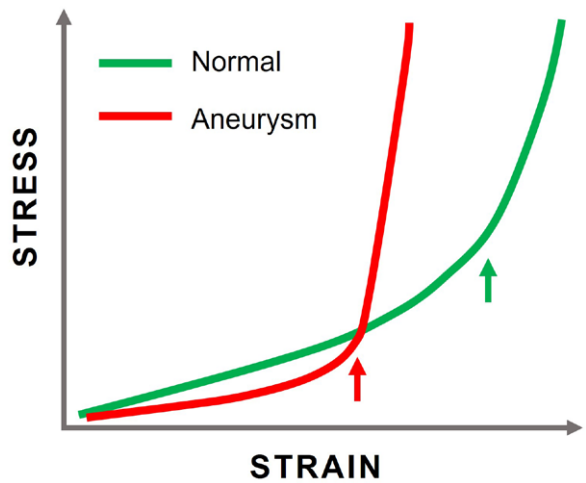

Fig. 3. Comparison of stress–strain curves between normal and aneurysmal aortic tissue during the loading phase. The nonlinear elastic behavior of aortic tissue is affected by the contributions of elastin and collagen. In normal aortic tissue, elastin activity is predominant. This results in an elastic-type shape (linear) over a greater range of strain, including a late inflection point where collagen activity begins to dominate (*green arrow*). In aortic aneurysmal tissue, due to abnormalities in elastin, collagen begins to activate earlier than usual, at lower levels of strain, resulting in an earlier inflection point (*red arrow*) and a rapid escalation of wall stress at lower levels of strain.

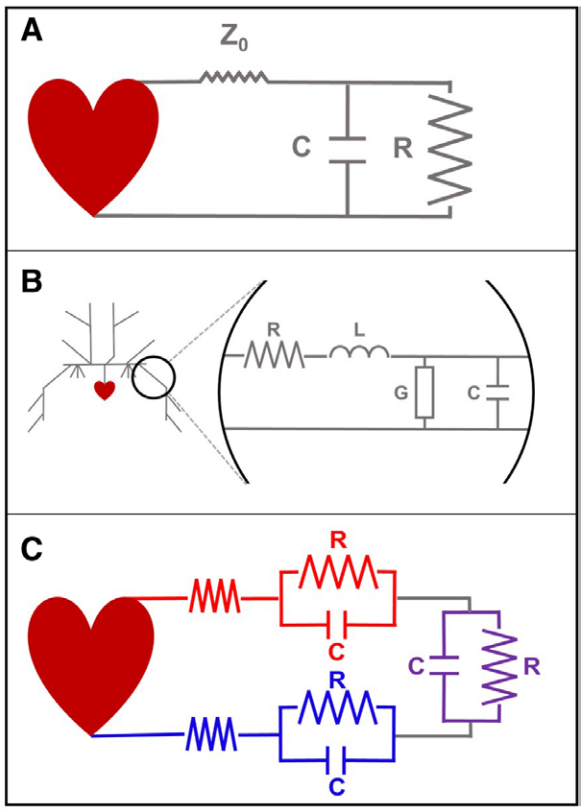

Fig. 4. Analog schematics of three commonly used ventriculo-arterial physiology models. (*A*) The three-element Windkessel combines aortic characteristic impedance (Z_0), with capacitance (C), and resistance (R).[21,23] (*B*) Distributed arterial model based on transmission line theory. The arterial tree is divided into segments based on its branches. Each branch is considered as a separate segment accounting for resistance (R), inductance (L), conductance (G), and capacitance (C). The segments are then combined to provide a model of the entire system.[21,22] (*C*) The reservoir pressure model divides the vascular system into three reservoirs: arterial (*red*), microcirculatory (*purple*), and venous (*blue*). Each reservoir has its own resistance (R) and capacitance (C). The pressure measured within the vascular system reflects a combination of the pressure within the reservoir and the excess pressure created by ejected blood from the ventricle, which passes through each reservoir sequentially.[21,24]

Downloaded from http://asa2.silverchair.com/anesthesiology/article-pdf/137/3/351/674460/20220900.0-00019.pdf by guest on 20 April 2024

Copyright © 2022, the American Society of Anesthesiologists. All Rights Reserved. Unauthorized reproduction of this article is prohibited.

The reservoir pressure model of the arterial system was developed to provide an alternate approach in which superimposed pressure waves (also called the excess pressure) are propagated and reflected on a pre-existing background reservoir pressure (fig. 4C).[12] The product of arterial compliance and resistance during late diastole (τ) is used in the generation of the reservoir pressure. Excess pressure is calculated by subtracting the reservoir pressure from the measured pressure, and wave travel is characterized using wave intensity analysis.[12] The effect of vasoactive agents on reservoir pressure, forward waves, and reflected waves can be calculated at specific sites. Left ventricular afterload can also be quantified using this model.[30]

Each of the three models of ventriculo-arterial physiology has its strengths, weaknesses, and underlying assumptions. The vascular system is complex and difficult to accurately model with a single mathematical approach. It is noteworthy that in all models, the aorta is not merely a conduit to the peripheral system but contributes to the dynamics of blood propagation and wave reflection, which affects cardiac function and delivery of blood to the peripheral arteries and organs.

Methods to Measure Aortic Biomechanics

Benchtop Mechanical Testing

Our current understanding of aortic biomechanics is largely based on benchtop (*ex vivo*) mechanical testing, which remains the standard for describing the mechanical properties of aortic tissue.[1] Most laboratory protocols follow a similar standard approach to storage, preparation, environmental conditions, and cyclical preconditioning before mechanical testing. Tensile testing is performed, whereby the tissue is affixed with clamps or hooks and mechanically stretched (or deformed) while a camera tracks displacement of reference dots previously added to the tissue. The corresponding tension is measured, and a stress–strain curve is generated. Tensile tests can be performed in a single direction (uniaxial) or simultaneously in two directions (biaxial). Biaxial testing is generally considered superior as it allows for proper accounting of the coupling of strain between the two directions. In addition to generation of a stress–strain curve, tissue can also be tested for ultimate tensile strength. This test involves uniaxially stretching tissue until failure, providing a measure of maximum strain tolerance as an indicator of strength. One limitation of mechanical testing is that it reflects only the passive (*i.e.*, noncellular) mechanical properties of the tissue determined by the content of the extracellular matrix. Another is that much of the stress applied to aortic tissue during tensile testing lies outside of normal physiologic conditions *in vivo*.[1] Finally, since this method of testing can only be performed on excised tissue, the clinical utility is restricted; there are limited "healthy" data for reference, and diseased aortas are studied only at the time of surgical intervention (*i.e.*, no longitudinal data).

Ultrasound or Echocardiography

Early work with ultrasound used M-mode measurements of aortic distension, where the ultrasound line is directed perpendicular to the aorta and the distance between the two walls is measured in end-diastole and end-systole, to estimate aortic stiffness as a static distensibility coefficient or stiffness index.[31] A second technique, pulse wave velocity, indirectly quantifies stiffness using the principle that blood will travel faster through a stiffer aorta. It can be measured by placing intra-arterial pressure catheters at two sites and measuring the pulse wave transit time, but the invasiveness and cost limit the research and clinical applicability of this approach. Less invasive and more error-prone, but still demonstrated to be clinically useful in predicting cardiovascular outcomes, is obtaining pulse wave velocity by combining the change of mean flow velocity during systole obtained by ultrasound, with the known density of blood, and simultaneous pressure measurement noninvasively (typically with applanation tonometry).[32,33] This approach, and other noninvasive techniques to measure pulse wave velocity, are used extensively in the cardiology and hypertension literature.[33,34] The introduction of speckle-tracking echocardiography has improved the quality and versatility of ultrasound as a tool for studying aortic biomechanics. Through a combination of semiautomated wall tracking and software algorithms, the aortic wall is manually traced during end-diastole by the software user, and the aorta becomes divided into "regions of interest" that are anchored to their relative location and typically made up of the entire wall (*i.e.*, intima, media, and adventitia).[35] These regions of interest will move along with their position on the aortic wall during the cardiac cycle, which will result in the regions spreading apart and returning to baseline during systole and diastole, respectively, allowing for measurements of circumferential, radial, and axial strain.[27,31,35–37] Preliminary work focused on speckle tracking echocardiography circumferential strain as a more precise iteration of the aforementioned M-mode distensibility coefficient.[31] However, when aortic strain is paired with simultaneous pressure measurements for the full cardiac cycle, pressure–strain loops can be generated.[36] These loops have a similar pattern of loading–unloading, hysteresis, and energy loss as seen in mechanical testing, thus opening a new avenue for the use of ultrasound in studying aortic biomechanics *in vivo*.[20,36] The benefits of ultrasound include minimal risk, less complexity, lower cost, reduced dependence on technology infrastructure, and excellent portability and versatility in terms of research/clinical applications. Drawbacks include inability to visualize the entire aorta, lower spatial resolution, image artifact, interference from adjacent organs or tissues, inability to include contrast for flow studies, and inconsistent image quality in patients with difficult ultrasound windows.

Computed Tomography and Magnetic Resonance Imaging

Both computed tomography and magnetic resonance imaging have been extensively used for the diagnosis and

Downloaded from http://asa2.silverchair.com/anesthesiology/article-pdf/137/3/351/674460/20220900.0-00019.pdf by guest on 20 April 2024

Copyright © 2022, the American Society of Anesthesiologists. All Rights Reserved. Unauthorized reproduction of this article is prohibited.

surveillance of aortic disease. Both can provide excellent spatial resolution, image the entire aorta with relative ease, and be combined with contrast to augment image quality or study blood flow characteristics.[1,15,38] The relative convenience and speed of image acquisition, combined with near universal availability in most tertiary hospitals, have led to computed tomography being more commonly used for surveillance of aortic disease, although additional information provided by magnetic resonance imaging makes it an excellent adjuvant imaging modality. Both computed tomography and magnetic resonance imaging have been effectively used to investigate aortic biomechanical properties in healthy patients as well as those with a variety of cardiovascular and aortic pathologies. Although beyond the scope of this review, in general, techniques will involve use of particular optical parameters of the acquired image to generate a mesh that represents the complex aortic architecture. This mesh is then used as a baseline from which to measure displacement of the aortic wall during the cardiac cycle to calculate aortic strain and, when combined with computational modeling, wall stress.[15,38] Finally, there has been growing interest in the use of magnetic resonance imaging four-dimensional flow analysis to examine the properties of blood flow within the aorta, including velocity, direction, and wall shear stress (fig. 5).[17,18] Computed tomography and magnetic resonance imaging are both excellent modalities for studying aortic biomechanics and are likely to provide even further insights as imaging quality and computing power continue to improve.

Clinical Applications of Aortic Biomechanics

Aortic Aneurysms

The largest clinical application of aortic biomechanics involves the rapidly growing field of research into pathophysiology and risk stratification of aneurysms, particularly the hereditary aortopathies.[1,9,10,39,40] Risk assessment based on maximum aortic diameter, given that by Laplace's law increased diameter results in greater wall stress, remains the foundation of current clinical guidelines regarding indications for prophylactic aneurysm resection.[41] However, there is a complex interplay between several pathways (metabolic, inflammatory, and immune), genetic and epigenetic factors, modulation through mechano-transduction, and interactions between the cellular and noncellular tissue components of aneurysmal aortic wall tissue.[1,9,10,39,40] These changes may result in pathologic activation of fibroblasts (into myofibroblasts), which proliferate, migrate, secrete collagen, and degrade elastin through secretion and regulation of matrix metalloproteases. The loss of the elastin or fibrillin elastic lamellae combined with increased collagen alter the microstructure of the extracellular matrix and the corresponding nonlinear elastic behavior of the tissue. This results in a pathophysiologic change to the stress–strain curve: a more prominent role for collagen at lower levels of tissue loading, an earlier inflection point, less elasticity, more rapid escalation of stress forces, increased energy loss (greater area between loading–unloading curves), and an increased risk for dissection or rupture (fig. 3). Since changes to the nature of the extracellular matrix directly affect the material properties of the tissue itself, the pathologic endpoint of many contributing pathways can detected in mechanical testing of excised tissue.[1] With the dramatic improvement in imaging technology, including accessibility, reduced cost and radiation, improved resolution (both spatial and temporal), and greater computer processing power, there has been rapid growth in the applications of noninvasive or semi-invasive biomechanical assessment of aortic aneurysms. There has been informative research linking computed tomography, magnetic resonance imaging, and echocardiographic measurements of aortic biomechanics, such as strain or wall shear stress, with histopathology and/or mechanical benchtop testing of excised aneurysm tissue demonstrating a link between imaging-based analysis and risk stratification.[1,18,20,42] The hope is that imaging-based biomechanics, including generation of noninvasive stress–strain curves and in conjunction with other biomarkers and emerging factors, can lead to patient-specific risk stratification and enhanced guidance for surgical decision-making.[42,43]

Medical Conditions and Altered Biomechanics

The impact of alterations of aortic material properties extends beyond changes in the tissue's extracellular matrix and mechanical behavior locally. As the aortic wall stiffens or the endothelium becomes dysfunctional, which can occur from a variety of disease states, there are corresponding implications to cardiovascular function.[44] Increasing aortic wall stiffness may result in alteration of the timing or size of reflected waves, increased characteristic impedance, or both. A stiffer aorta will result in reflected waves traveling faster, thus returning to the ascending aorta during systole as opposed to diastole.[32,44–46] Systolic reflected waves (as opposed to diastolic reflected waves under normal circumstances) and increased characteristic impedance raise the effective afterload faced by the left ventricle when ejecting blood during systole.[46] Endothelial dysfunction, in part through interactions with smooth muscle cells and the extracellular matrix, can lead to abnormal viscoelasticity, increased energy loss, and greater wall stiffness.[47–49] Therefore, changes in aortic physiology due to disease can have negative impacts on overall cardiovascular function and long-term health. In various patient populations, increased aortic stiffness has been associated with left ventricular hypertrophy, diastolic dysfunction, increased cardiovascular events, and mortality (table 1).[45,46,50–53]

Downloaded from http://asa2.silverchair.com/anesthesiology/article-pdf/137/3/351/674460/20220900.0-00019.pdf by guest on 20 April 2024

Copyright © 2022, the American Society of Anesthesiologists. All Rights Reserved. Unauthorized reproduction of this article is prohibited.

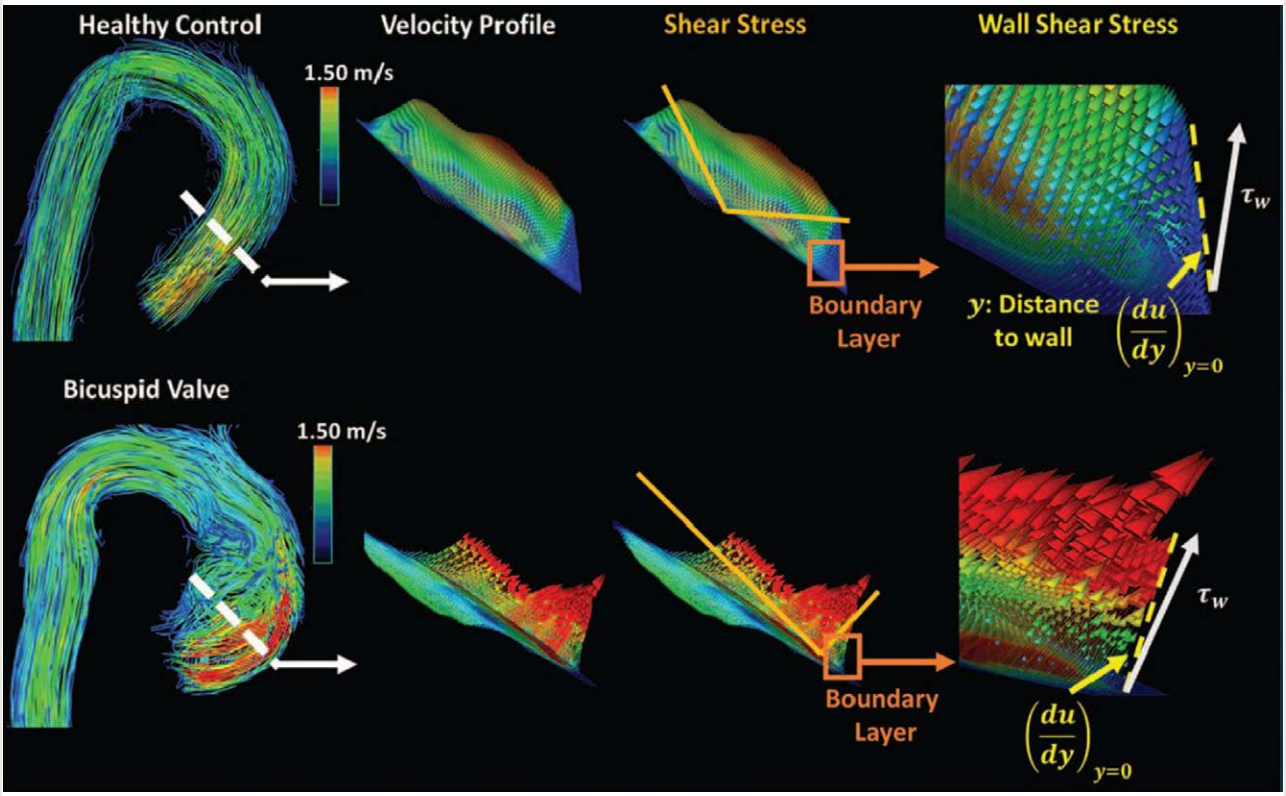

Fig. 5. Comparison of four-dimensional flow analysis generated from cardiac magnetic resonance imaging in both a healthy control and a patient with bicuspid aortic valve and ascending aortic aneurysm. An individualized wall shear stress heat map is generated for both individuals. (*Left*) The velocity streamlines of blood flow at peak systole, taken at the cross-section of aorta demarcated by the *white hashed line*. Note the more symmetrically distributed and narrow range of velocities in the healthy control compared with the bicuspid valve patient (graphically represented by the *magenta angled lines*). (*Right*) The individual velocity streamlines located at the aortic wall boundary layer (*orange box*). The velocity (u) of blood flow and position relative to the wall boundary layer (y) are used to calculate the local wall shear stress, expressed as a force per unit area exerted in the fluid direction on the local vessel tangent (τ_w). The bicuspid valve patient has significantly elevated wall shear stress due to alterations in blood flow velocity and direction caused by the valvular disease and shape of the aneurysm. Areas of elevated wall shear stress may result in activating pathways leading to pathophysiologic changes in the aortic wall.[4,17] Images reproduced with permission from Fatehi Hassanabad *et al.*[17]

Aortic Interposition Grafts and Thoracic Stenting

Replacing native aorta, with either interposition (surgical) graft or endovascular stents, will effectively result in a discrete section of stiffer "aorta." The potential impacts of graft implantation were initially demonstrated in canine models. The replacement of the native aorta resulted in increased characteristic impedance, decreased total arterial compliance (an estimated sum of compliance of the entire arterial tree), increased pulse wave velocity, and a 30% increase in myocardial oxygen consumption.[54,55] After endovascular stenting, a nonphysiologic negative wave at the distal end of the graft was also observed, with potential implications for post-stent dilation or device migration. Many of these findings have since been confirmed in clinical studies on patients undergoing similar aortic interventions. Young adults after aortic resection with Dacron graft for traumatic aortic injury exhibited increased impedance, decreased total arterial compliance, altered wave reflection, and greater cardiac energetic costs during exercise compared with age-matched controls.[56] After endovascular stent implantation, increases in pulse wave velocity have been measured, along with concurrent increases in left ventricular hydraulic load (which is similar to characteristic impedance), left ventricular hypertrophy, diastolic dysfunction, and potentially detrimental effects on coronary perfusion, although the clinical ramifications have not been fully delineated.[57–59] The surrounding aortic tissue may also be impacted. After ascending aortic replacement with an interposition graft, greater aortic strain has been measured in the native descending aorta, suggesting that a larger pulse wave (and possibly greater loading or shearing forces) is being transmitted.[37] Thoracic aortic endovascular stenting, *via* reduced curvature of the arch and stented segments, leads to compensatory changes in morphology and motion during systole of the ascending aorta.[60]

Downloaded from http://asa2.silverchair.com/anesthesiology/article-pdf/137/3/351/674460/20220900.0-00019.pdf by guest on 20 April 2024

Copyright © 2022, the American Society of Anesthesiologists. All Rights Reserved. Unauthorized reproduction of this article is prohibited.

Table 1. Summary of Medical Conditions that Have Been Previously Demonstrated to Have Effects on Parameters of Aortic Biomechanics and the Resultant Clinical Impacts

Medical Condition	Aortic Biomechanical Parameter(s) Measured	Findings	Clinical Relevance	References
Advanced age	Reservoir wave analysis	Increased systolic constant	Increased stroke, increased myocardial infraction, and increased composite of cardiovascular events	41
Diabetes mellitus	Aortic distensibility and stiffness index	Decreased distensibility and increased stiffness index	Increased diastolic dysfunction	45,46
Hypertension	Aortic distensibility	Decreased distensibility	Increased diastolic dysfunction	45
	Reservoir wave analysis	Increased systolic constant	Increased stroke, increased myocardial infraction, and increased composite of cardiovascular events	41
	Effective arterial elastance and total arterial compliance	Decreased effective arterial elastance and decreased total arterial compliance	Increased diastolic dysfunction	40
Hypothyroid	Strain, distensibility, and stiffness index	Decreased strain, decreased distensibility, increased stiffness index	Increased diastolic dysfunction and increased myocardial performance index (*i.e.*, poorer global left ventricular function)	47

Perioperative Implications of Aortic Biomechanics

There is a paucity of data regarding the perioperative significance and effects of anesthesia on aortic biomechanics. However, based on our existing knowledge of the physiologic ramifications of derangements to normal aortic function, there are three areas of potential importance and consideration for further study: perioperative risk of adverse cardiovascular events, elucidating effects of anesthetic agents, and innovations in intraoperative monitoring.

In general, aortic stiffening raises the characteristic impedance, alters the propagation of the pulse wave, and changes the patterns of reflected waves. The consequences of these changes include increased left ventricular work with impaired systolic and diastolic function, reduced coronary blood flow reserve, increased pulse wave velocity, and an overall increased risk of cardiovascular events.[13,45,46,50–52,61–64] Advanced age, hypertension, and diabetes are known risk factors for perioperative and long-term cardiovascular complications, independent of aortic biomechanics.[65–67] In these populations, it will be challenging to quantify the relative contribution of abnormal aortic function to patient outcomes. However, could patients with isolated abnormalities in aortic biomechanics from isolated aortic disease or replacement with artificial graft material have increased risk of perioperative major adverse cardiac events or reduced long-term cardiovascular health? Recent recommendations for perioperative cardiovascular risk assessment include measurements of serum levels of brain natriuretic peptide and troponin in select patients.[66,68] Pulse wave velocity has been shown to be a reliable predictor for long-term cardiovascular mortality and is being measured more frequently as part of a cardiovascular health assessment.[64,69] Perhaps these approaches to risk assessment should be extended to patients with known aortic disease or previous insertion of stents/grafts?

There are no studies specifically assessing the impact of anesthetic agents on aortic biomechanics. Hypothetical aortic biomechanical changes secondary to administration of anesthetics can be inferred based on previous research of their direct effects on vascular smooth muscle tone and endothelial function, in addition to their potential to mediate the effects of sympathetic tone or pain on dynamic arterial stiffness (table 2).[48,70–74] Autonomic and neurohumoral systems may progressively influence aortic stiffness and hemodynamics in humans through increased sympathetic tone from exercise or painful stimuli.[71,72] The effects of reduced sympathetic and neurohumoral responses secondary to neuraxial anesthesia, regional blocks, or any other method of analgesia could potentially reduce aortic stiffness.

Although the proportion of smooth muscle cells to extracellular matrix components is lower in the aorta compared with arteries and arterioles, these cells remain important as mediators of aortic vascular tone and direct influencers of the extracellular matrix.[3,9] There has been extensive research on the effects of anesthetic agents, both volatile and intravenous, on mediators and pathways involved in smooth muscle cell vasoconstriction/vasodilation.[70,74] Some of the pathways studied include receptor activation, Ca2+ mobilization, myofilament Ca^{2+} sensitivity, and potassium-chloride/Rho kinase, as well as modulation of vascular tone in response to medications and other stimuli.[70,74] The endothelium contributes to aortic biomechanics through its effects on viscoelasticity and direct vasodilation *via* smooth muscle cells.[47,48] There are several causes for perioperative endothelial damage, many of which result from activation of inflammatory pathways and could manifest as increased energy loss in biomechanical evaluation of aortic tissue (both *in vivo* and *ex vivo*).[6,19,20,48,73] A single anesthetic agent can have opposite effects on smooth muscle tone and endothelial function, acting simultaneously to both improve and impair vascular function (table 2). The summation of these effects should result in dominant mechanism(s) that determine the overall impact of administering anesthetic agents on aortic biomechanics, and it is reasonable to assume that

Downloaded from http://asa2.silverchair.com/anesthesiology/article-pdf/137/3/351/674460/20220900.0-00019.pdf by guest on 20 April 2024

Copyright © 2022, the American Society of Anesthesiologists. All Rights Reserved. Unauthorized reproduction of this article is prohibited.

Table 2. Summary of Predicted Impact of Anesthetic Agents on Aortic Biomechanics Based on Their Documented Effects on Smooth Muscle Cell and Endothelial Cell Function

Anesthetic Agent	Potential Effect on Aortic Biomechanics	Mechanism	References
Volatile anesthetics	Reduced aortic stiffness	Inhibition of receptor activation, Ca^{2+} mobilization/release/sensitivity, and potassium-chloride/Rho kinase pathways for smooth muscle vasoconstriction	58,61
	Increased aortic stiffness	Inhibition of endothelium-mediated smooth muscle vasodilator medications	58
	Increased aortic stiffness	Inhibition of endothelium-independent smooth muscle vasodilator medications	58
	Increased aortic stiffness	Inhibition of endothelium-dependent direct smooth muscle vasodilation	43
	Increased/decreased energy loss (context sensitive)	Context sensitive damage (increased energy loss) or support (decreased energy loss) of endothelium	43
Propofol	Increased aortic stiffness	Inhibition of endothelium-mediated smooth muscle vasodilator medications	58
	Increased aortic stiffness	Inhibition of endothelium-independent smooth muscle vasodilator medications	58
	Reduced aortic stiffness	Inhibition of receptor activation and Ca^{2+} mobilization/release/sensitivity pathways for smooth muscle vasoconstriction	58
	Increased/reduced aortic stiffness (context-sensitive)	Context sensitive inhibition (increased stiffness) or activation (reduced stiffness) of endothelium-dependent direct smooth muscle vasodilation	43
	Increased energy loss	Damage to endothelium	43
Ketamine	Increased aortic stiffness	Inhibition of endothelium-mediated smooth muscle vasodilator medications	58
	Increased aortic stiffness	Inhibition of endothelium-independent smooth muscle vasodilator medications	58
	Reduced aortic stiffness	Inhibition of receptor activation and Ca^{2+} mobilization/release/sensitivity pathways for smooth muscle vasoconstriction	58
	Reduced energy loss	Support of the endothelium	43
Etomidate	Increased aortic stiffness	Inhibition of endothelium-mediated smooth muscle vasodilator medications	58
	Increased aortic stiffness	Inhibition of endothelium-independent smooth muscle vasodilator medications	58
	Increased aortic stiffness	Inhibition of endothelium-dependent direct smooth muscle vasodilation	58
Benzodiazepines	Reduced aortic stiffness	Inhibition of receptor activation and Ca^{2+} mobilization/release/sensitivity pathways for smooth muscle vasoconstriction	58
	Reduced aortic stiffness	Activation of endothelium-dependent direct smooth muscle vasodilation	43
	Increased/decreased energy loss (context sensitive)	Context sensitive damage (increased energy loss) or support (decreased energy loss) of endothelium	43
Opioids	Increased aortic stiffness	Inhibition of endothelium-mediated smooth muscle vasodilator medications	58
	Reduced aortic stiffness	Activation of endothelium-dependent direct smooth muscle vasodilation	58
	Increased/decreased energy loss (context sensitive)	Context sensitive damage (increased energy loss) or support (decreased energy loss) of endothelium	43

agents known to clinically result in peripheral vasodilation would most likely lead to reduced aortic stiffness as well. This assumption needs to be proven, and the effect of anesthetic agents on the interactions between the smooth muscle cells and the components of the extracellular matrix should also be elucidated.

The overall impact of anesthesia and anesthetic agents, alone or in combination, on aortic stiffness, energy loss, measures of nonlinear elasticity, characteristic impedance, wave reflections, and the resultant effects on cardiac function or patient outcomes is currently unknown, but could be an interesting avenue for further research.

Regardless of change to perioperative risk stratification or the potential effects of anesthesia, lack of established perioperative aortic biomechanical monitoring remains a major limitation to our current understanding of the relationship between aortic function, perioperative care, and clinical outcomes. Although there have been numerous publications with large sample sizes on the clinical impact of aortic and arterial stiffness in the outpatient population, the methods are less feasible within the workflow of perioperative anesthesia care, particularly in the operating room.[33,46] Transesophageal echocardiography has been used to determine ascending aortic elastance values that correlate with histopathologic alterations thought to reflect high-risk of acute rupture or dissection in aneurysm tissue.[20] In reality, transesophageal ultrasound will likely be limited as a modality for cardiac and vascular surgery patients for the near future. However, developments in intraoperative monitoring highlight possible methods for a more generalizable approach to monitoring aortic biomechanics. By combining aortic pressure (generated from an arterial catheter and transfer function) with aortic flow velocity (obtained from esophageal Doppler), aortic velocity–pressure loops can be created from which a novel measure, the "global afterload angle," is derived.[75] Early use of global afterload angle intraoperatively suggests it may be able to distinguish between states of normal or elevated afterload related to aortic stiffness, although at the moment this remains a preliminary concept, requiring invasive monitoring and a high level of expertise. As a substitute for invasive measurements, a recent publication demonstrated that machine learning was able to derive measurements of aortic mechanics and cardiac contractility using a noninvasive peripheral pressure measurement.[26] Finally, pulse contour

Downloaded from http://asa2.silverchair.com/anesthesiology/article-pdf/137/3/351/674460/20220900.0-00019.pdf by guest on 20 April 2024

Copyright © 2022, the American Society of Anesthesiologists. All Rights Reserved. Unauthorized reproduction of this article is prohibited.

analysis monitoring technology has seen recent developments of algorithms to predict impending hypotension. The data used to generate the algorithm included elements of reflected waves, which may be able to function as a surrogate for aortic stiffness.[76] Although still early in their development, and not having been used to specifically measure aortic biomechanics in our populations of interest, these advances in monitoring technology could open avenues for perioperative research into the effects of surgery and anesthesia on aortic function and left ventricular performance.

Conclusions

The aorta is more than a conduit between the heart and the arteries, delivering blood to the periphery. The physiology of the cardiovascular system is complex, and the aorta plays an important role within it. Changes in aortic properties, through disease states or surgical interventions, have demonstrated increased impedance to left ventricular ejection, with corresponding effects on ventricular function, energy consumption, and wall remodeling. Transmission of the pulse wave to the peripheral vessels and organs, and the reflected waves produced at the branch points of the arterial tree, are also affected. Investigations into the clinical applications of aortic biomechanics, although currently focused on the pathophysiologic exploration and risk stratification of aortic aneurysms, have the potential to branch into other areas. These include the perioperative arena, where pre-existing disease processes, surgical interventions, or administration of medications (including anesthetic agents) can impart changes to patients' aortic biomechanics with associated clinical implications in the short and long term. Anesthesiologists are uniquely positioned to participate in current and future research in the field of aortic biomechanics with expertise in cell biology, pharmacology, cardiovascular physiology, cardiovascular monitoring, echocardiography, perioperative medicine, and a tradition of multidisciplinary collaboration. By further leveraging existing imaging and monitoring technologies to generate noninvasive measurements of aortic biomechanical properties, our understanding of the clinical impact of health, disease, and medical interventions on aortic physiology can be better understood.

Research Support

Dr. Di Martino reports a Natural Sciences and Engineering Research Council of Canada (Ottawa, Canada) Discovery Grant and Canadian Institutes of Health Research (Ottawa, Canada) Project Grant 463972.

Competing Interests

The authors declare no competing interests.

Correspondence

Address correspondence to Dr. Gregory: Department of Anesthesiology, Perioperative and Pain Medicine, Room C222, Foothills Medical Center, 1403, 29th St. N.W., Calgary, Alberta, Canada, T2N2T9. alex.gregory@ahs.ca.
Anesthesiology's articles are made freely accessible to all readers on www.anesthesiology.org, for personal use only, 6 months from the cover date of the issue.

References

1. Emmott A, Garcia J, Chung J, Lachapelle K, El-Hamamsy I, Mongrain R, Cartier R, Leask RL: Biomechanics of the ascending thoracic aorta: A clinical perspective on engineering data. Can J Cardiol 2016; 32:35–47
2. Holzapfel GA, Ogden RW: Biomechanical relevance of the microstructure in artery walls with a focus on passive and active components. Am J Physiol Heart Circ Physiol 2018; 315:H540–9
3. Lacolley P, Regnault V, Segers P, Laurent S: Vascular smooth muscle cells and arterial stiffening: Relevance in development, aging, and disease. Physiol Rev 2017; 97:1555–617
4. Robertson AM, Watton PN: Mechanobiology of the arterial wall: Transport in biological media, 1st edition. Edited by Becker S and Kuznetsov A. Amsterdam, Elsevier, 2013, pp 275–348
5. Ross MH, Pawlina W: Histology: A Text and Atlas: With Correlated Cell and Molecular Biology, 6th edition. Philadelphia, Wolters Kluwer/Lippincott Williams & Wilkins Health, 2011
6. Chung J, Lachapelle K, Wener E, Cartier R, De Varennes B, Fraser R, Leask RL: Energy loss, a novel biomechanical parameter, correlates with aortic aneurysm size and histopathologic findings. J Thorac Cardiovasc Surg 2014; 148:1082–8; discussion 1088–9
7. Stenmark KR, Yeager ME, El Kasmi KC, Nozik-Grayck E, Gerasimovskaya EV, Li M, Riddle SR, Frid MG: The adventitia: Essential regulator of vascular wall structure and function. Annu Rev Physiol 2013; 75:23–47
8. Lacolley P, Regnault V, Laurent S: Mechanisms of arterial stiffening: From mechanotransduction to epigenetics. Arterioscler Thromb Vasc Biol 2020; 40:1055–62
9. Shen YH, LeMaire SA, Webb NR, Cassis LA, Daugherty A, Lu HS: Aortic aneurysms and dissections series. Arterioscler Thromb Vasc Biol 2020; 40:e37–46
10. Shen YH, LeMaire SA, Webb NR, Cassis LA, Daugherty A, Lu HS: Aortic aneurysms and dissections series: Part II: Dynamic signaling responses in aortic aneurysms and dissections. Arterioscler Thromb Vasc Biol 2020; 40:e78–86
11. Kouz K, Scheeren TWL, de Backer D, Saugel B: Pulse wave analysis to estimate cardiac output. Anesthesiology 2021; 134:119–26
12. Tyberg JV, Davies JE, Wang Z, Whitelaw WA, Flewitt JA, Shrive NG, Francis DP, Hughes AD, Parker KH, Wang JJ: Wave intensity analysis and the development

Downloaded from http://asa2.silverchair.com/anesthesiology/article-pdf/137/3/351/674460/20220900.0-00019.pdf by guest on 20 April 2024

Copyright © 2022, the American Society of Anesthesiologists. All Rights Reserved. Unauthorized reproduction of this article is prohibited.

of the reservoir-wave approach. Med Biol Eng Comput 2009; 47:221–32
13. Sluyter JD, Hughes AD, Camargo CA Jr, Thom SAM, Parker KH, Hametner B, Wassertheurer S, Scragg R: Identification of distinct arterial waveform clusters and a longitudinal evaluation of their clinical usefulness. Hypertension 2019; 74:921–8
14. Chowienczyk P: Pulse wave analysis: What do the numbers mean? Hypertension 2011; 57:1051–2
15. Martufi G, Forneris A, Appoo JJ, Di Martino ES: Is there a role for biomechanical engineering in helping to elucidate the risk profile of the thoracic aorta? Ann Thorac Surg 2016; 101:390–8
16. Katritsis D, Kaiktsis L, Chaniotis A, Pantos J, Efstathopoulos EP, Marmarelis V: Wall shear stress: Theoretical considerations and methods of measurement. Prog Cardiovasc Dis 2007; 49:307–29
17. Fatehi Hassanabad A, Garcia J, Verma S, White JA, Fedak PWM: Utilizing wall shear stress as a clinical biomarker for bicuspid valve-associated aortopathy. Curr Opin Cardiol 2019; 34:124–31
18. Guala A, Dux-Santoy L, Teixido-Tura G, Ruiz-Muñoz A, Galian-Gay L, Servato ML, Valente F, Gutiérrez L, González-Alujas T, Johnson KM, Wieben O, Casas-Masnou G, Sao Avilés A, Fernandez-Galera R, Ferreira-Gonzalez I, Evangelista A, Rodríguez-Palomares JF: Wall shear stress predicts aortic dilation in patients with bicuspid aortic valve. JACC Cardiovasc Imaging 2022; 15:46–56
19. Nightingale M, Gregory A, Sigaeva T, Dobson GM, Fedak PWM, Appoo JJ, Di Martino ES, Nightingale M, Gregory A, Beddoes R, Nickel A, Sattari S, Sigaeva T, Bromley A, Appoo JJ, Di Martino ES: Biomechanics in ascending aortic aneurysms correlate with tissue composition and strength. JTCVS Open 2022; 9:1–10
20. Emmott A, Alzahrani H, Alreshidan M, Therrien J, Leask RL, Lachapelle K: Transesophageal echocardiographic strain imaging predicts aortic biomechanics: Beyond diameter. J Thorac Cardiovasc Surg 2018; 156:503–512.e1
21. Zhou S, Xu L, Hao L, Xiao H, Yao Y, Qi L, Yao Y: A review on low-dimensional physics-based models of systemic arteries: Application to estimation of central aortic pressure. Biomed Eng Online 2019; 18:41
22. Avolio AP: Multi-branched model of the human arterial system. Med Biol Eng Comput 1980; 18:709–18
23. Westerhof N, Lankhaar JW, Westerhof BE: The arterial Windkessel. Med Biol Eng Comput 2009; 47:131–41
24. Tyberg JV, Bouwmeester JC, Parker KH, Shrive NG, Wang JJ: The case for the reservoir-wave approach. Int J Cardiol 2014; 172:299–306
25. Karamanoglu M, O'Rourke MF, Avolio AP, Kelly RP: An analysis of the relationship between central aortic and peripheral upper limb pressure waves in man. Eur Heart J 1993; 14:160–7
26. Bikia V, Papaioannou TG, Pagoulatou S, Rovas G, Oikonomou E, Siasos G, Tousoulis D, Stergiopulos N: Noninvasive estimation of aortic hemodynamics and cardiac contractility using machine learning. Sci Rep 2020; 10:15015
27. Gregory AJ, Dobson G: Proximal aortic compliance and diastolic function assessed by speckle tracking imaging. Can J Anaesth 2013; 60:667–74
28. Fitchett DH: LV-arterial coupling: Interactive model to predict effect of wave reflections on LV energetics. Am J Physiol 1991; 261(4 pt 2):H1026–33
29. Segers P, Stergiopulos N, Westerhof N, Wouters P, Kolh P, Verdonck P: Systemic and pulmonary hemodynamics assessed with a lumped-parameter heart-arterial interaction model. J Eng Math 2003; 47:185–99
30. Parker KH, Alastruey J, Stan GB: Arterial reservoir-excess pressure and ventricular work. Med Biol Eng Comput 2012; 50:419–24
31. Rong LQ, Kim J, Gregory AJ: Speckle tracking echocardiography: Imaging insights into the aorta. Curr Opin Cardiol 2020; 35:116–22
32. Segers P, Rietzschel ER, Chirinos JA: How to measure arterial stiffness in humans. Arterioscler Thromb Vasc Biol 2020; 40:1034–43
33. Mitchell GF, Hwang SJ, Vasan RS, Larson MG, Pencina MJ, Hamburg NM, Vita JA, Levy D, Benjamin EJ: Arterial stiffness and cardiovascular events: The Framingham Heart Study. Circulation 2010; 121:505–11
34. Townsend RR, Wilkinson IB, Schiffrin EL, Avolio AP, Chirinos JA, Cockcroft JR, Heffernan KS, Lakatta EG, McEniery CM, Mitchell GF, Najjar SS, Nichols WW, Urbina EM, Weber T; American Heart Association Council on Hypertension: Recommendations for improving and standardizing vascular research on arterial stiffness: A scientific statement from the American Heart Association. Hypertension 2015; 66:698–722
35. Blessberger H, Binder T: Two dimensional speckle tracking echocardiography: Basic principles. Heart 2010; 96:716–22
36. Gregory A, Kruger M, Maher N, Moore R, Dobson G: Non-invasive determination of aortic mechanical properties and their effects on left ventricular function following endovascular abdominal aneurysm repair. J Med Biol Eng 2019; 39:739–51
37. Rong LQ, Palumbo MC, Rahouma M, Meineri M, Arguelles GR, Kim J, Lau C, Devereux RB, Pryor KO, Girardi LN, Redaelli A, Gaudino MFL, Weinsaft JW: Immediate impact of prosthetic graft replacement of the ascending aorta on circumferential strain in the descending aorta. Eur J Vasc Endovasc Surg 2019; 58:521–8
38. Bhave NM, Nienaber CA, Clough RE, Eagle KA: Multimodality imaging of thoracic aortic diseases in adults. JACC Cardiovasc Imaging 2018; 11:902–19

Downloaded from http://asa2.silverchair.com/anesthesiology/article-pdf/137/3/351/674460/20220900.0-00019.pdf by guest on 20 April 2024

Copyright © 2022, the American Society of Anesthesiologists. All Rights Reserved. Unauthorized reproduction of this article is prohibited.

39. Boileau A, Lindsay ME, Michel JB, Devaux Y: Epigenetics in ascending thoracic aortic aneurysm and dissection. Aorta (Stamford) 2018; 6:1–12
40. Cebull HL, Rayz VL, Goergen CJ: Recent advances in biomechanical characterization of thoracic aortic aneurysms. Front Cardiovasc Med 2020; 7:75
41. Hiratzka LF, Bakris GL, Beckman JA, Bersin RM, Carr VF, Casey DE Jr, Eagle KA, Hermann LK, Isselbacher EM, Kazerooni EA, Kouchoukos NT, Lytle BW, Milewicz DM, Reich DL, Sen S, Shinn JA, Svensson LG, Williams DM; American College of Cardiology Foundation/American Heart Association Task Force on Practice Guidelines; American Association for Thoracic Surgery; American College of Radiology; American Stroke Association; Society of Cardiovascular Anesthesiologists; Society for Cardiovascular Angiography and Interventions; Society of Interventional Radiology; Society of Thoracic Surgeons; Society for Vascular Medicine: 2010 ACCF/AHA/AATS/ACR/ASA/SCA/SCAI/SIR/STS/SVM guidelines for the diagnosis and management of patients with thoracic aortic disease. A report of the American College of Cardiology Foundation/American Heart Association Task Force on Practice Guidelines, American Association for Thoracic Surgery, American College of Radiology, American Stroke Association, Society of Cardiovascular Anesthesiologists, Society for Cardiovascular Angiography and Interventions, Society of Interventional Radiology, Society of Thoracic Surgeons, and Society for Vascular Medicine. J Am Coll Cardiol 2010; 55:e27–129
42. Fletcher AJ, Syed MBJ, Aitman TJ, Newby DE, Walker NL: Inherited thoracic aortic disease: New insights and translational targets. Circulation 2020; 141:1570–87
43. Gregory AJ, Di Martino E, Fedak PWM: Aortic diameter: The beginning of the end of an era. J Thorac Cardiovasc Surg 2018; 156:513–4
44. Yu S, McEniery CM: Central *versus* peripheral artery stiffening and cardiovascular risk. Arterioscler Thromb Vasc Biol 2020; 40:1028–33
45. Kawaguchi M, Hay I, Fetics B, Kass DA: Combined ventricular systolic and arterial stiffening in patients with heart failure and preserved ejection fraction: Implications for systolic and diastolic reserve limitations. Circulation 2003; 107:714–20
46. Narayan O, Davies JE, Hughes AD, Dart AM, Parker KH, Reid C, Cameron JD: Central aortic reservoir-wave analysis improves prediction of cardiovascular events in elderly hypertensives. Hypertension 2015; 65:629–35
47. Beck L, Su J, Comerma-Steffensen S, Pinilla E, Carlsson R, Hernanz R, Sheykhzade M, Danielsen CC, Simonsen U: Endothelial dysfunction and passive changes in the aorta and coronary arteries of diabetic db/db mice. Front Physiol 2020; 11:667
48. Aguirre JA, Lucchinetti E, Clanachan AS, Plane F, Zaugg M: Unraveling interactions between anesthetics and the endothelium: Update and novel insights. Anesth Analg 2016; 122:330–48
49. Davis GE, Senger DR: Endothelial extracellular matrix. Circ Res 2005; 97:1093–107
50. Borlaug BA, Melenovsky V, Redfield MM, Kessler K, Chang HJ, Abraham TP, Kass DA: Impact of arterial load and loading sequence on left ventricular tissue velocities in humans. J Am Coll Cardiol 2007; 50:1570–7
51. Eren M, Gorgulu S, Uslu N, Celik S, Dagdeviren B, Tezel T: Relation between aortic stiffness and left ventricular diastolic function in patients with hypertension, diabetes, or both. Heart 2004; 90:37–43
52. Karamitsos TD, Karvounis HI, Didangelos TP, Papadopoulos CE, Kachrimanidou MK, Selvanayagam JB, Parharidis GE: Aortic elastic properties are related to left ventricular diastolic function in patients with type 1 diabetes mellitus. Cardiology 2008; 109:99–104
53. Ozhan H, Yazici M, Albayrak S, Erbilen E, Bulur S, Akdemir R, Uyan C: Elastic properties of the ascending aorta and left ventricular function in patients with hypothyroidism. Echocardiography 2005; 22:649–56
54. Dobson G, Flewitt J, Tyberg JV, Moore R, Karamanoglu M: Endografting of the descending thoracic aorta increases ascending aortic input impedance and attenuates pressure transmission in dogs. Eur J Vasc Endovasc Surg 2006; 32:129–35
55. Kelly RP, Tunin R, Kass DA: Effect of reduced aortic compliance on cardiac efficiency and contractile function of in situ canine left ventricle. Circ Res 1992; 71:490–502
56. Kim SY, Hinkamp TJ, Jacobs WR, Lichtenberg RC, Posniak H, Pifarré R: Effect of an inelastic aortic synthetic vascular graft on exercise hemodynamics. Ann Thorac Surg 1995; 59:981–9
57. Kamenskiy A, Aylward P, Desyatova A, DeVries M, Wichman C, MacTaggart J: Endovascular repair of blunt thoracic aortic trauma is associated with increased left ventricular mass, hypertension, and off-target aortic remodeling. Ann Surg 2021; 274:1089–98
58. Tzilalis VD, Kamvysis D, Panagou P, Kaskarelis I, Lazarides MK, Perdikides T, Prassopoulos P, Boudoulas H: Increased pulse wave velocity and arterial hypertension in young patients with thoracic aortic endografts. Ann Vasc Surg 2012; 26:462–7
59. van Bakel TMJ, Arthurs CJ, Nauta FJH, Eagle KA, van Herwaarden JA, Moll FL, Trimarchi S, Patel HJ, Figueroa CA: Cardiac remodelling following thoracic endovascular aortic repair for descending aortic aneurysms. Eur J Cardiothorac Surg 2019; 55:1061–70
60. Hirotsu K, Suh GY, Lee JT, Dake MD, Fleischmann D, Cheng CP: Changes in geometry and cardiac

Downloaded from http://asa2.silverchair.com/anesthesiology/article-pdf/137/3/351/674460/20220900.0-00019.pdf by guest on 20 April 2024

Copyright © 2022, the American Society of Anesthesiologists. All Rights Reserved. Unauthorized reproduction of this article is prohibited.

deformation of the thoracic aorta after thoracic endovascular aortic repair. Ann Vasc Surg 2018; 46:83–9
61. Chirinos JA, Zambrano JP, Chakko S, Veerani A, Schob A, Willens HJ, Perez G, Mendez AJ: Aortic pressure augmentation predicts adverse cardiovascular events in patients with established coronary artery disease. Hypertension 2005; 45:980–5
62. Hametner B, Wassertheurer S, Mayer CC, Danninger K, Binder RK, Weber T: Aortic pulse wave velocity predicts cardiovascular events and mortality in patients undergoing coronary angiography: A comparison of invasive measurements and noninvasive estimates. Hypertension 2021; 77:571–81
63. Tritakis V, Tzortzis S, Ikonomidis I, Dima K, Pavlidis G, Trivilou P, Paraskevaidis I, Katsimaglis G, Parissis J, Lekakis J: Association of arterial stiffness with coronary flow reserve in revascularized coronary artery disease patients. World J Cardiol 2016; 8:231–9
64. Blacher J, Asmar R, Djane S, London GM, Safar ME: Aortic pulse wave velocity as a marker of cardiovascular risk in hypertensive patients. Hypertension 1999; 33:1111–7
65. Bilimoria KY, Liu Y, Paruch JL, Zhou L, Kmiecik TE, Ko CY, Cohen ME: Development and evaluation of the universal ACS NSQIP surgical risk calculator: A decision aid and informed consent tool for patients and surgeons. J Am Coll Surg 2013; 217:833–42.e1-3
66. Fleisher LA, Fleischmann KE, Auerbach AD, Barnason SA, Beckman JA, Bozkurt B, Davila-Roman VG, Gerhard-Herman MD, Holly TA, Kane GC, Marine JE, Nelson MT, Spencer CC, Thompson A, Ting HH, Uretsky BF, Wijeysundera DN: 2014 ACC/AHA guideline on perioperative cardiovascular evaluation and management of patients undergoing noncardiac surgery. Circulation 2014; 130:e278–333
67. Mozaffarian D, Wilson PWF, Kannel WB: Beyond established and novel risk factors. Circulation 2008; 117:3031–8
68. Duceppe E, Parlow J, MacDonald P, Lyons K, McMullen M, Srinathan S, Graham M, Tandon V, Styles K, Bessissow A, Sessler DI, Bryson G, Devereaux PJ: Canadian Cardiovascular Society guidelines on perioperative cardiac risk assessment and management for patients who undergo noncardiac surgery. Can J Cardiol 2017; 33:17–32
69. Sequí-Domínguez I, Cavero-Redondo I, Álvarez-Bueno C, Pozuelo-Carrascosa DP, Nuñez de Arenas-Arroyo S, Martínez-Vizcaíno V: Accuracy of pulse wave velocity predicting cardiovascular and all-cause mortality. A systematic review and meta-analysis. J Clin Med 2020; 9:2080
70. Akata T: General anesthetics and vascular smooth muscle: Direct actions of general anesthetics on cellular mechanisms regulating vascular tone. Anesthesiology 2007; 106:365–91
71. Harvey RE, Barnes JN, Hart EC, Nicholson WT, Joyner MJ, Casey DP: Influence of sympathetic nerve activity on aortic hemodynamics and pulse wave velocity in women. Am J Physiol Heart Circ Physiol 2017; 312:H340–6
72. Kalfon R, Campbell J, Alvarez-Alvarado S, Figueroa A: Aortic hemodynamics and arterial stiffness responses to muscle metaboreflex activation with concurrent cold pressor test. Am J Hypertens 2015; 28:1332–8
73. Riedel B, Rafat N, Browne K, Burbury K, Schier R: Perioperative implications of vascular endothelial dysfunction: Current understanding of this critical sensor-effector organ. Curr Anesth Rep 2013; 3:151–61
74. Yang S, Liu Y, Huang S, Jin F, Qi F: Sevoflurane and isoflurane inhibit KCl-induced, Rho kinase-mediated, and PI3K-participated vasoconstriction in aged diabetic rat aortas. BMC Anesthesiol 2021; 21:212
75. Le Gall A, Gayat É, Joachim J, Cohen S, Hong A, Matéo J, Buxin C, Millasseau S, Mebazaa A, Vallée F: Velocity-pressure loops can estimate intrinsic and pharmacologically induced changes in cardiac afterload during non-cardiac surgery. An observational study. J Clin Monit Comput 2022; 36:545–55
76. Hatib F, Jian Z, Buddi S, Lee C, Settels J, Sibert K, Rinehart J, Cannesson M: Machine-learning algorithm to predict hypotension based on high-fidelity arterial pressure waveform analysis. Anesthesiology 2018; 129:663–74

Downloaded from http://asa2.silverchair.com/anesthesiology/article-pdf/137/3/351/674460/20220900.0-00019.pdf by guest on 20 April 2024

Copyright © 2022, the American Society of Anesthesiologists. All Rights Reserved. Unauthorized reproduction of this article is prohibited.